skkmigas PERTAMINA EP	**PERTAMINA EP REGIONAL 1 ZONA 4**	POG

DATASHEET FOR CABLE TRAY & ACCESSORIES	No. Dok. : TMBP-SP001-EL-DST-D107 Rev. : A Halaman : 1 dari 44

NAMA PEMILIK PROYEK : **PT PERTAMINA EP**

NAMA PROYEK : **JASA PEMBANGUNAN FASILITAS PRODUKSI STASIUN PENGUMPUL (SP) TANJUNG MIRING BARAT & KARANGAN TIMUR**

LOKASI : **SP TANJUNG MIRING BARAT & KARANGAN TIMUR - FIELD LIMAU**

NO. KONTRAK : **SA02035383B**

REV.	TGL.	DESKRIPSI	DISIAPKAN	DIPERIKSA	DISETUJUI	DIPERIKSA	DISETUJUI
A	30/12/2025	Issued For Review	FN	AS	RTN		
			PT. PROSYMPAC OIL & GAS			PT. PERTAMINA EP	

TABEL REVISI

Rev.	Tanggal	Deskripsi

COMMENT RESPONSE SHEET

No.	Page	Company's Comment	Contractor's Response	Remarks

DAFTAR ISI

NO.	ID. NO.	JUDUL	SHEET
1	-	COVER	1 dari 44
2	-	REVISION TABLE	2 dari 44
3	-	COMMENT RESPONSE SHEET	3 dari 44
4	-	DAFTAR ISI	4 dari 44
8	GLT - 01	STRAIGHT CABLE TRAY	6 dari 44
9	GLT - 02	HORIZONTAL ELBOW 90 BEND	7 dari 44
10	GLT - 03	OUTSIDE RISER 90° BEND	8 dari 44
11	GLT - 04	INSIDE RISER 90° BEND	9 dari 44
12	GLT - 05	"TEE" BRANCH (UNEQUAL)	10 dari 44
13	GLT - 06	"TEE" BRANCH (EQUAL)	11 dari 44
14	GLT - 07	OFFSET REDUCER, RIGHT HAND	12 dari 44
15	GLT - 08	OFFSET REDUCER, LEFT HAND	13 dari 44
16	GLT - 09	STRAIGHT CABLE TRAY COVER	14 dari 44
17	GLT - 10	HORIZONTAL ELBOW COVER BEND 90°	15 dari 44
18	GLT - 11	OUTSIDE RISER COVER BEND 90°	16 dari 44
19	GLT - 12	INSIDE RISER COVER BEND 90°	17 dari 44
20	GLT - 13	"TEE" BRANCH (UNEQUAL) COVER	18 dari 44
21	GLT - 14	"TEE" BRANCH (EQUAL) COVER	19 dari 44
22	GLT - 15	OFFSET REDUCER, RIGHT HAND COVER	20 dari 44
23	GLT - 16	OFFSET REDUCER,LEFT HAND COVER	21 dari 44
24	GLT - 17	COVER CLAMP	22 dari 44
25	GLT - 18	VERTICAL HINGE / VERTICAL SPLICE PLATE ADJUSTABLE	23 dari 44
26	GLT - 19	HORIZONTAL HINGE / HORIZONTAL SPLICE PLATE ADJUSTABLE	24 dari 44
27	GLT - 20	JOINTING FLANGE / SPLICE PLATE	25 dari 44
28	GLT - 21	END PLATE	26 dari 44
29	GLT - 22	SEPARATOR STRAIGHT	27 dari 44
30	GVT - 01	STRAIGHT CABLE TRAY	28 dari 44
31	GVT - 02	ELBOW 90° BEND	29 dari 44
32	GVT - 03	"TEE" BRANCH (EQUAL)	30 dari 44
33	GVT - 04	OUTSIDE RISER	31 dari 44
34	GVT - 05	INSIDE RISER	32 dari 44
35	GVT - 06	OFFSET REDUCER, LEFT HAND	33 dari 44
36	GVT - 07	STRAIGHT CABLE TRAY COVER	34 dari 44
37	GVT - 08	HORIZONTAL ELBOW COVER BEND 90°	35 dari 44
38	GVT - 09	"TEE" BRANCH (EQUAL) COVER	36 dari 44
39	GVT - 10	OUTSIDE RISER COVER BEND 90°	37 dari 44
40	GVT - 11	INSIDE RISER COVER BEND 90°	38 dari 44
41	GVT - 12	COVER OFFSET REDUCER, LEFT HAND	39 dari 44
42	GVT - 13	COVER CLAMP	40 dari 44

NO.	ID. NO.	JUDUL	SHEET
43	GVT - 14	COUPLING PLATE	41 dari 44
44	GVT - 15	VERTICAL HINGE ADJUSTABLE	42 dari 44
45	GVT - 16	HORIZONTAL HINGE ADJUSTABLE	43 dari 44
46	AT - 01	ROUND HEAD SQUARE NECK	44 dari 44

NOTE :

1. ALL ITEMS SHALL BE VERIFIED AND FINALIZED BY EPC CONTRACTOR DURING EXECUTION STAGE.

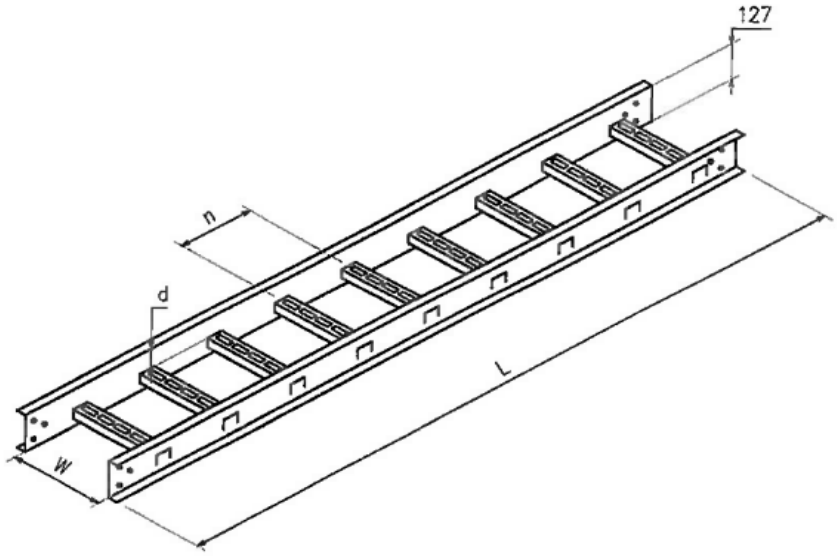

DIMENSION :

W (mm)	L (mm)	n(mm)	d (mm)
150	3000	300	Min.89
300	3000	300	Min.89
450	3000	300	Min.89
600	3000	300	Min.89

ID. No. : GLT - 01

NO.	GENERAL REQUIREMENTS	
1	COMPLIANCE STANDARD	ASTM A123/123M, NEMA VE-1
2	EQUIPMENT NAME	STRAIGHT CABLE TRAY
3	TYPE	LADDER TYPE (HEAVY DUTY TYPE)
4	MATERIAL	SHEET STEEL
5	FINISHED	HOT DIP GALVANIZED (MIN. 65 MICRON)
6	LENGTH	3000mm
7	THICKNESS	2mm
8	REMARKS	STANDARD QUANTITY OF RUNG : MANUFACTURE STANDARD SIDE RAIL TYPE
9	SERVICE	SUPPORT CABLE RUN

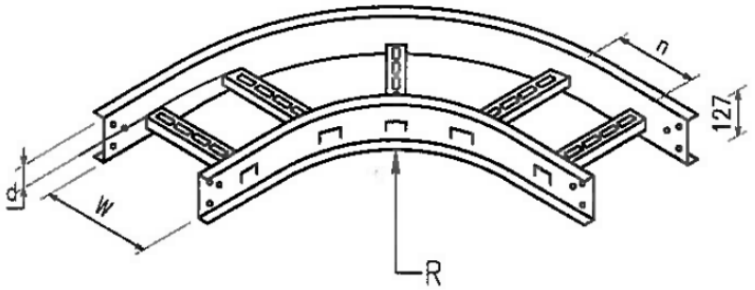

DIMENSION :

W (mm)	d (mm)	R (mm)	n(mm)
150	Min.89	300	300
150	Min.89	600	300
150	Min.89	900	300
300	Min.89	300	300
300	Min.89	600	300
300	Min.89	900	300
450	Min.89	300	300
450	Min.89	600	300
450	Min.89	900	300
600	Min.89	600	300
600	Min.89	900	300

ID. No. : GLT - 02

NO.	GENERAL REQUIREMENTS	
1	COMPLIANCE STANDARD	ASTM A123/123M, NEMA VE-1
2	EQUIPMENT NAME	HORIZONTAL ELBOW 90 BEND
3	TYPE	LADDER TYPE (HEAVY DUTY TYPE)
4	MATERIAL	SHEET STEEL
5	FINISHED	HOT DIP GALVANIZED (MIN. 65 MICRON)
6	LENGTH	-
7	THICKNESS	2mm
8	REMARKS	STANDARD QUANTITY OF RUNG : MANUFACTURE STANDARD SIDE RAIL TYPE : MANUFACTURE STANDARD
9	SERVICE	SUPPORT CABLE RUN

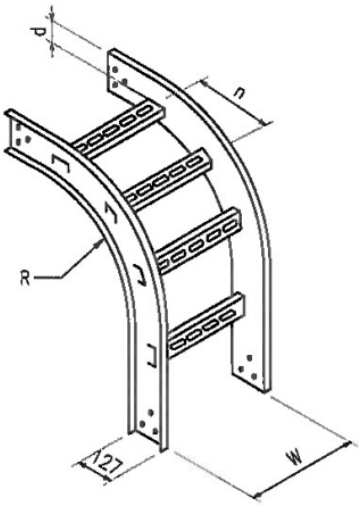

DIMENSION :

W (mm)	d (mm)	R (mm)	n(mm)
150	Min.89	300	300
150	Min.89	600	300
150	Min.89	900	300
300	Min.89	300	300
300	Min.89	600	300
300	Min.89	900	300
450	Min.89	300	300
450	Min.89	600	300
450	Min.89	900	300
600	Min.89	600	300
600	Min.89	900	300

ID. No. : GLT - 03

NO.	GENERAL REQUIREMENTS	
1	COMPLIANCE STANDARD	ASTM A123/123M, NEMA VE-1
2	EQUIPMENT NAME	OUTSIDE RISER 90° BEND
3	TYPE	LADDER TYPE (HEAVY DUTY TYPE)
4	MATERIAL	SHEET STEEL
5	FINISHED	HOT DIP GALVANIZED (MIN. 65 MICRON)
6	LENGTH	-
7	THICKNESS	2mm
8	REMARKS	STANDARD QUANTITY OF RUNG : MANUFACTURE STANDARD SIDE RAIL TYPE : MANUFACTURE STANDARD
9	SERVICE	SUPPORT CABLE RUN

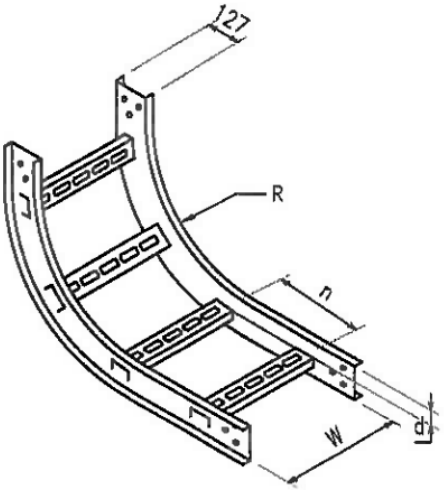

DIMENSION :

W (mm)	d (mm)	R (mm)	n(mm)
150	Min.89	300	300
150	Min.89	600	300
150	Min.89	900	300
300	Min.89	300	300
300	Min.89	600	300
300	Min.89	900	300
450	Min.89	300	300
450	Min.89	600	300
450	Min.89	900	300
600	Min.89	600	300
600	Min.89	900	300

ID. No. : GLT - 04

NO.	GENERAL REQUIREMENTS	
1	COMPLIANCE STANDARD	ASTM A123/123M, NEMA VE-1
2	EQUIPMENT NAME	INSIDE RISER 90° BEND
3	TYPE	LADDER TYPE (HEAVY DUTY TYPE)
4	MATERIAL	SHEET STEEL
5	FINISHED	HOT DIP GALVANIZED (MIN. 65 MICRON)
6	LENGTH	-
7	THICKNESS	2mm
8	REMARKS	STANDARD QUANTITY OF RUNG : MANUFACTURE STANDARD SIDE RAIL TYPE : MANUFACTURE STANDARD
9	SERVICE	SUPPORT CABLE RUN

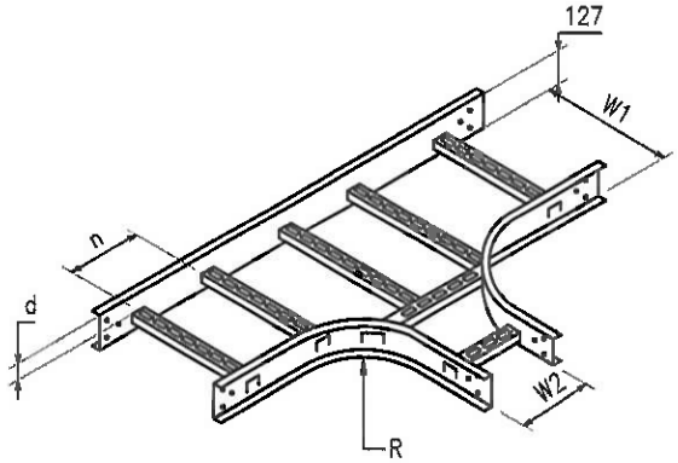

DIMENSION :

W1 (mm)	W2 (mm)	d (mm)	R (mm)	n(mm)
300	150	Min.89	300	300
600	150	Min.89	600	300
450	150	Min.89	300	300
450	300	Min.89	600	300
600	300	Min.89	300	300
600	300	Min.89	600	300
600	300	Min.89	900	300

ID. No. : GLT - 05

NO.	GENERAL REQUIREMENTS	
1	COMPLIANCE STANDARD	ASTM A123/123M, NEMA VE-1
2	EQUIPMENT NAME	"TEE" BRANCH (UNEQUAL)
3	TYPE	LADDER TYPE (HEAVY DUTY TYPE)
4	MATERIAL	SHEET STEEL
5	FINISHED	HOT DIP GALVANIZED (MIN. 65 MICRON)
6	LENGTH	-
7	THICKNESS	2mm
8	REMARKS	STANDARD QUANTITY OF RUNG : MANUFACTURE STANDARD SIDE RAIL TYPE : MANUFACTURE STANDARD LENGTH OF "T" QUANTITY BRANCH : MANUFACTURE STANDARD
9	SERVICE	SUPPORT CABLE RUN

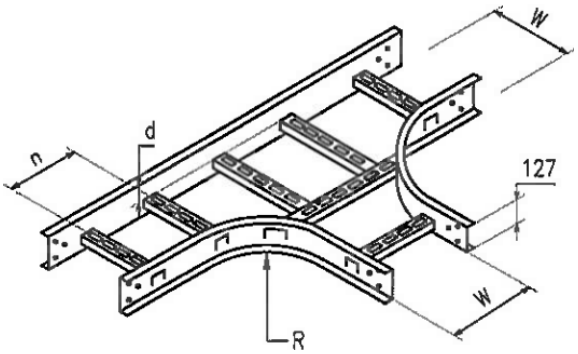

DIMENSION :

W (mm)	d (mm)	R (mm)	n(mm)
150	Min.89	300	300
150	Min.89	600	300
150	Min.89	900	300
300	Min.89	300	300
300	Min.89	600	300
300	Min.89	900	300
450	Min.89	300	300
450	Min.89	600	300
450	Min.89	900	300
600	Min.89	600	300
600	Min.89	900	300

ID. No. : GLT - 06

NO.	GENERAL REQUIREMENTS	
1	COMPLIANCE STANDARD	ASTM A123/123M, NEMA VE-1
2	EQUIPMENT NAME	"TEE" BRANCH (EQUAL)
3	TYPE	LADDER TYPE (HEAVY DUTY TYPE)
4	MATERIAL	SHEET STEEL
5	FINISHED	HOT DIP GALVANIZED (MIN. 65 MICRON)
6	LENGTH	-
7	THICKNESS	2mm
8	REMARKS	STANDARD QUANTITY OF RUNG : MANUFACTURE STANDARD SIDE RAIL TYPE : MANUFACTURE STANDARD LENGTH OF "T" QUANTITY BRANCH : MANUFACTURE STANDARD
9	SERVICE	SUPPORT CABLE RUN

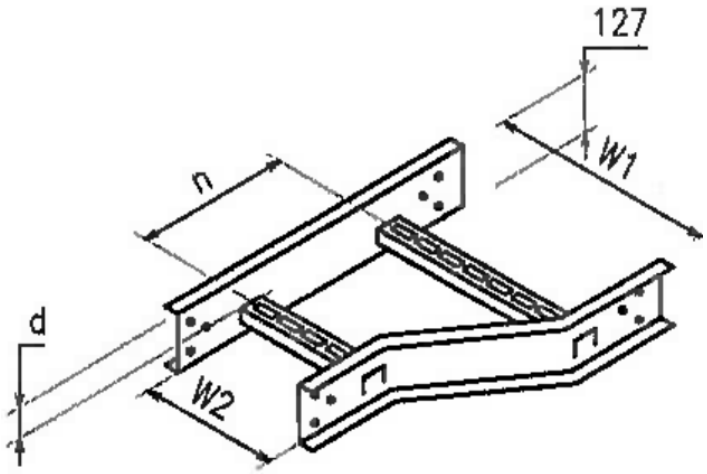

DIMENSION :

W1 (mm)	W2 (mm)	d (mm)	n(mm)
300	150	Min.89	300
450	150	Min.89	300
450	300	Min.89	300
600	150	Min.89	300
600	300	Min.89	300
900	450	Min.89	300

ID. No. : GLT - 07

NO.	GENERAL REQUIREMENTS	
1	COMPLIANCE STANDARD	ASTM A123/123M, NEMA VE-1
2	EQUIPMENT NAME	OFFSET REDUCER, RIGHT HAND
3	TYPE	LADDER TYPE (HEAVY DUTY TYPE)
4	MATERIAL	SHEET STEEL
5	FINISHED	HOT DIP GALVANIZED (MIN. 65 MICRON)
6	LENGTH	-
7	THICKNESS	2mm
8	REMARKS	STANDARD QUANTITY OF RUNG : MANUFACTURE STANDARD SIDE RAIL TYPE : MANUFACTURE STANDARD LENGTH OF "T" QUANTITY BRANCH : MANUFACTURE STANDARD
9	SERVICE	SUPPORT CABLE RUN

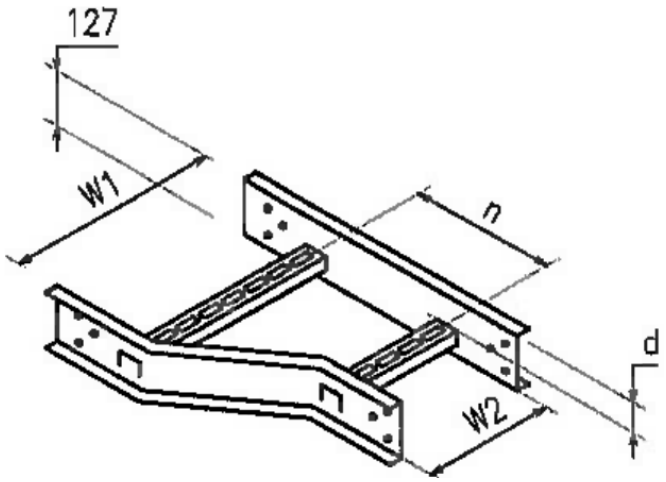

DIMENSION :

W1 (mm)	W2 (mm)	d (mm)	n(mm)
300	150	Min.89	300
450	150	Min.89	300
450	300	Min.89	300
600	150	Min.89	300
600	300	Min.89	300
900	450	Min.89	300

ID. No. : GLT - 08

NO.	GENERAL REQUIREMENTS	
1	COMPLIANCE STANDARD	ASTM A123/123M, NEMA VE-1
2	EQUIPMENT NAME	OFFSET REDUCER, LEFT HAND
3	TYPE	LADDER TYPE (HEAVY DUTY TYPE)
4	MATERIAL	SHEET STEEL
5	FINISHED	HOT DIP GALVANIZED (MIN. 65 MICRON)
6	LENGTH	-
7	THICKNESS	2mm
8	REMARKS	STANDARD QUANTITY OF RUNG : MANUFACTURE STANDARD SIDE RAIL TYPE : MANUFACTURE STANDARD LENGTH OF "T" QUANTITY BRANCH : MANUFACTURE STANDARD
9	SERVICE	SUPPORT CABLE RUN

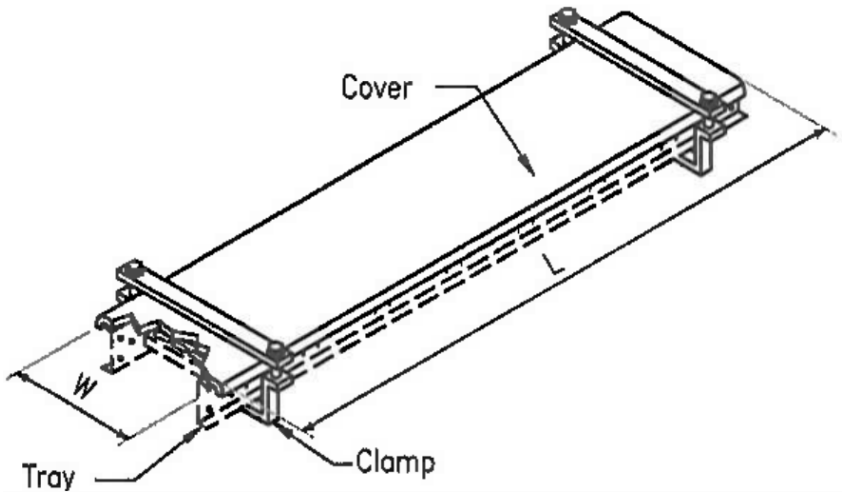

DIMENSION :

CABLE TRAY SIZE W (mm)	L (mm)
150	1500
300	1500
450	1500
600	1500

ID. No. : GLT - 09

NO.	GENERAL REQUIREMENTS	
1	COMPLIANCE STANDARD	ASTM A123/123M, NEMA VE-1
2	EQUIPMENT NAME	STRAIGHT CABLE TRAY COVER
3	TYPE	LADDER TYPE (HEAVY DUTY TYPE)
4	MATERIAL	SHEET STEEL
5	FINISHED	HOT DIP GALVANIZED (MIN. 65 MICRON)
6	LENGTH	1500mm
7	THICKNESS	2mm
8	REMARKS	-
9	SERVICE	STRAIGHT COVER CABLE TRAY

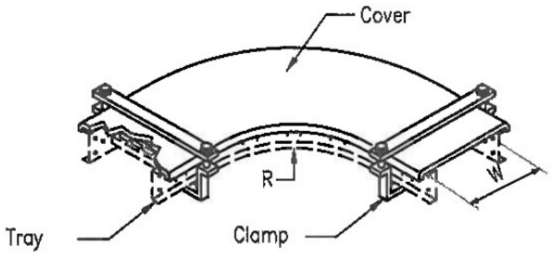

DIMENSION :

CABLE TRAY SIZE W (mm)	R (mm)
150	300
150	600
150	900
300	300
300	600
300	900
450	300
450	600
450	900
600	600
600	900

ID. No. : GLT - 10

NO.	GENERAL REQUIREMENTS	
1	COMPLIANCE STANDARD	ASTM A123/123M, NEMA VE-1
2	EQUIPMENT NAME	HORIZONTAL ELBOW COVER BEND 90°
3	TYPE	LADDER TYPE (HEAVY DUTY TYPE)
4	MATERIAL	SHEET STEEL
5	FINISHED	HOT DIP GALVANIZED (MIN. 65 MICRON)
6	LENGTH	-
7	THICKNESS	2mm
8	REMARKS	DIMENSION OF HORIZONTAL ELBOW COVER : MANUFACTURE STANDARD
9	SERVICE	STRAIGHT COVER CABLE TRAY

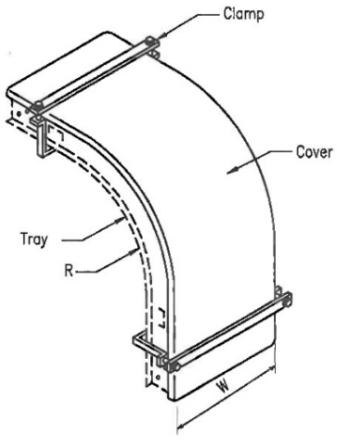

DIMENSION :

CABLE TRAY SIZE W (mm)	R (mm)
150	300
150	600
150	900
300	300
300	600
300	900
450	300
450	600
450	900
450	600
450	900

ID. No. : GLT - 11

NO.	GENERAL REQUIREMENTS	
1	COMPLIANCE STANDARD	ASTM A123/123M, NEMA VE-1
2	EQUIPMENT NAME	OUTSIDE RISER COVER BEND 90°
3	TYPE	LADDER TYPE (HEAVY DUTY TYPE)
4	MATERIAL	SHEET STEEL
5	FINISHED	HOT DIP GALVANIZED (MIN. 65 MICRON)
6	LENGTH	-
7	THICKNESS	2mm
8	REMARKS	DIMENSION OF OUTSIDE RISER COVER : MANUFACTURE STANDARD
9	SERVICE	COVER OF OUTSIDE RISER BEND CABLE TRAY LADDER 90°

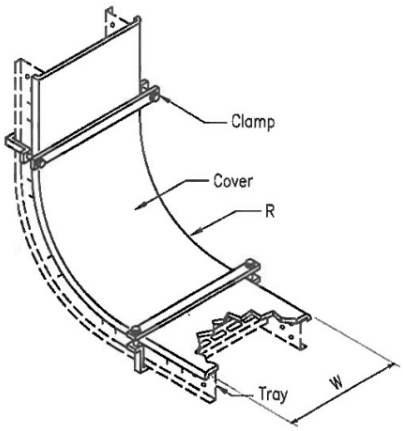

DIMENSION :

CABLE TRAY SIZE W (mm)	R (mm)
150	300
150	600
150	900
300	300
300	600
300	900
450	300
450	600
450	900
450	600
450	900

ID. No. : GLT - 12

NO.	GENERAL REQUIREMENTS	
1	COMPLIANCE STANDARD	ASTM A123/123M, NEMA VE-1
2	EQUIPMENT NAME	INSIDE RISER COVER BEND 90°
3	TYPE	LADDER TYPE (HEAVY DUTY TYPE)
4	MATERIAL	SHEET STEEL
5	FINISHED	HOT DIP GALVANIZED (MIN. 65 MICRON)
6	LENGTH	-
7	THICKNESS	2mm
8	REMARKS	DIMENSION OF INSIDE RISER COVER : MANUFACTURE STANDARD
9	SERVICE	COVER OF INSIDE RISER BEND CABLE TRAY LADDER 90°

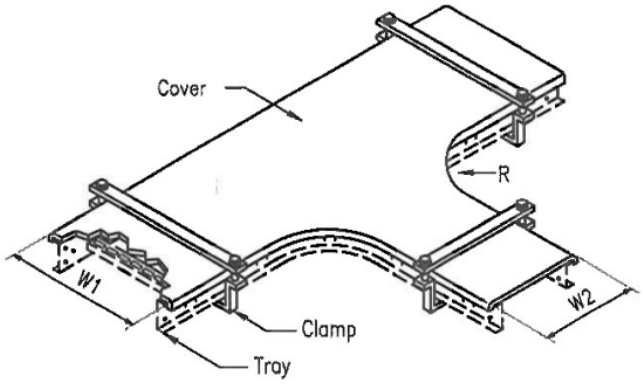

DIMENSION :

CABLE TRAY SIZE	
W1 (mm)	W2 (mm)
300	150
600	150
450	150
450	300
600	300
600	300
600	300

ID. No. : GLT - 13

NO.	GENERAL REQUIREMENTS	
1	COMPLIANCE STANDARD	ASTM A123/123M, NEMA VE-1
2	EQUIPMENT NAME	"TEE" BRANCH (UNEQUAL) COVER
3	TYPE	LADDER TYPE (HEAVY DUTY TYPE)
4	MATERIAL	SHEET STEEL
5	FINISHED	HOT DIP GALVANIZED (MIN. 65 MICRON)
6	LENGTH	-
7	THICKNESS	2mm
8	REMARKS	DIMENSION OF "T" BRANCH (UNEQUAL) COVER : MANUFACTURE STANDARD
9	SERVICE	"TEE" BRANCH (UNEQUAL) COVER CABLE TRAY LADDER

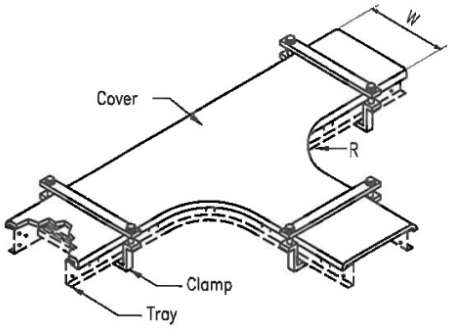

DIMENSION :

CABLE TRAY SIZE W (mm)	R (mm)
150	300
150	600
150	900
300	300
300	600
300	900
450	300
450	600
450	900
450	600
450	900

ID. No. : GLT - 14

NO.	GENERAL REQUIREMENTS	
1	COMPLIANCE STANDARD	ASTM A123/123M, NEMA VE-1
2	EQUIPMENT NAME	"TEE" BRANCH (EQUAL) COVER
3	TYPE	LADDER TYPE (HEAVY DUTY TYPE)
4	MATERIAL	SHEET STEEL
5	FINISHED	HOT DIP GALVANIZED (MIN. 65 MICRON)
6	LENGTH	-
7	THICKNESS	2mm
8	REMARKS	DIMENSION OF "T" BRANCH (EQUAL) COVER : MANUFACTURE STANDARD
9	SERVICE	"TEE" BRANCH (EQUAL) COVER CABLE TRAY LADDER

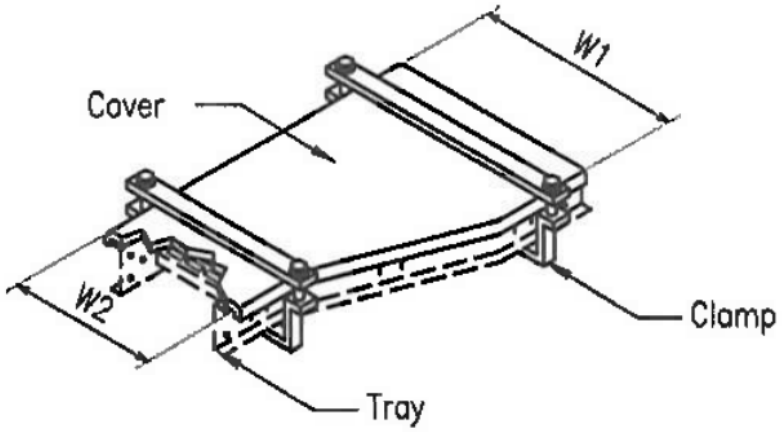

DIMENSION :

CABLE TRAY SIZE W1 (mm)	CABLE TRAY SIZE W2 (mm)
300	150
450	150
450	300
600	150
600	300

ID. No. : GLT - 15

NO.	GENERAL REQUIREMENTS	
1	COMPLIANCE STANDARD	ASTM A123/123M, NEMA VE-1
2	EQUIPMENT NAME	OFFSET REDUCER, RIGHT HAND COVER
3	TYPE	LADDER TYPE (HEAVY DUTY TYPE)
4	MATERIAL	SHEET STEEL
5	FINISHED	HOT DIP GALVANIZED (MIN. 65 MICRON)
6	LENGTH	-
7	THICKNESS	2mm
8	REMARKS	DIMENSION OF OFFSET REDUCER, LEFT HAND COVER : MANUFACTURE STANDARD
9	SERVICE	OFFSET REDUCER, RIGHT HAND COVER CABLE TRAY LADDER

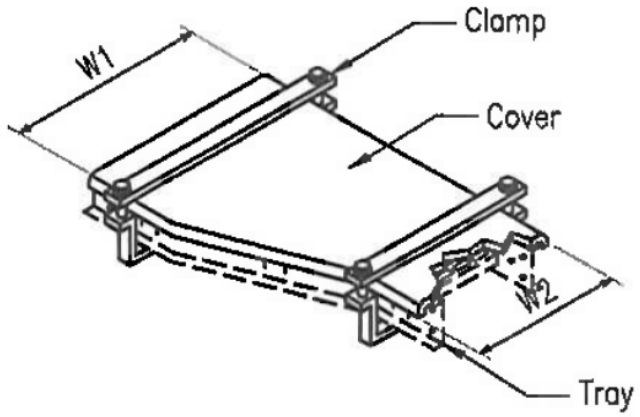

DIMENSION :

CABLE TRAY SIZE W1 (mm)	CABLE TRAY SIZE W2 (mm)
300	150
450	150
450	300
600	150
600	300

ID. No. : GLT - 16

NO.	GENERAL REQUIREMENTS	
1	COMPLIANCE STANDARD	ASTM A123/123M, NEMA VE-1
2	EQUIPMENT NAME	OFFSET REDUCER,LEFT HAND COVER
3	TYPE	LADDER TYPE (HEAVY DUTY TYPE)
4	MATERIAL	SHEET STEEL
5	FINISHED	HOT DIP GALVANIZED (MIN. 65 MICRON)
5	LENGTH	-
6	THICKNESS	2mm
7	REMARKS	DIMENSION OF OFFSET REDUCER, LEFT HAND COVER : MANUFACTURE STANDARD
8	SERVICE	OFFSET REDUCER, LEFT HAND COVER CABLE TRAY LADDER

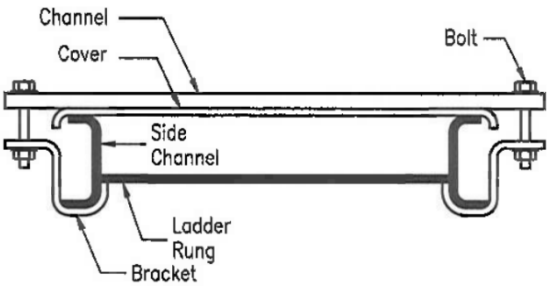

COMPRISES

- Channel : 1 pc
- Bracket : 2 pcs
- Bolts, Nuts and Washers : 2 pcs

DIMENSION :

CABLE TRAY SIZE	HEIGHT
150	127
300	127
450	127
600	127

ID. No. : GLT - 17

NO.	GENERAL REQUIREMENTS	
1	COMPLIANCE STANDARD	ASTM A123/123M, NEMA VE-1
2	EQUIPMENT NAME	COVER CLAMP
3	TYPE	LADDER TYPE (HEAVY DUTY TYPE)
4	MATERIAL	BOLT, NUT & WASHERS : STAINLESS STEEL (SS-304)
		U-CHANNEL, BRACKET : SHEET STEEL
5	FINISHED	BOLT, NUT & WASHERS : NATURAL
		U-CHANNEL, BRACKET : HOT DIP GALVANIZED (MIN. 65 MICRON)
6	THICKNESS	2mm
7	REMARKS	DIMENSION OF COVER CLAMP : MANUFACTURE STANDARD
8	SERVICE	SUPPORT CLAMP FOR CABLE TRAY LADDER

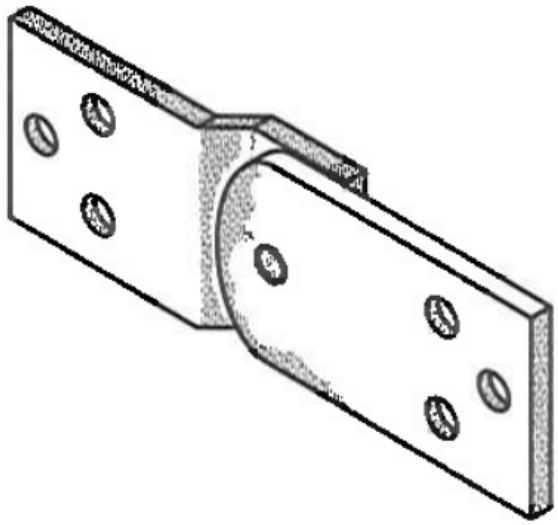

ID. No. : GLT - 18

NO.	GENERAL REQUIREMENTS	
1	COMPLIANCE STANDARD	ASTM A123/123M, NEMA VE-1
2	EQUIPMENT NAME	VERTICAL HINGE / VERTICAL SPLICE PLATE ADJUSTABLE
3	TYPE	LADDER TYPE (HEAVY DUTY TYPE)
4	MATERIAL	SHEET STELL
5	FINISHED	HOT DIP GALVANIZED (MIN. 65 MICRON)
6	LENGTH	-
7	THICKNESS	MANUFACTURE STANDARD
8	REMARKS	DIMENSION OF VERTICAL HINGE : MANUFACTURE STANDARD
9	SERVICE	SUPPORT JOIN FOR CAB;E TRAY LADDER

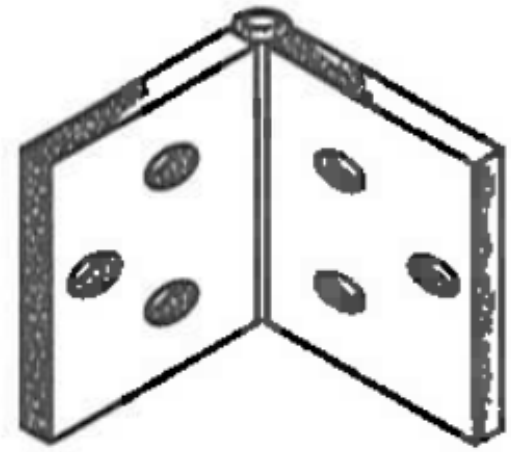

ID. No. : GLT - 19

NO.	GENERAL REQUIREMENTS	
1	COMPLIANCE STANDARD	ASTM A123/123M, NEMA VE-1
2	EQUIPMENT NAME	HORIZONTAL HINGE / HORIZONTAL SPLICE PLATE ADJUSTABLE
3	TYPE	LADDER TYPE (HEAVY DUTY TYPE)
4	MATERIAL	SHEET STELL
5	FINISHED	HOT DIP GALVANIZED (MIN. 65 MICRON)
6	LENGTH	-
7	THICKNESS	MANUFACTURE STANDARD
8	REMARKS	DIMENSION OF HORIZONTAL HINGE : MANUFACTURE STANDARD
9	SERVICE	SUPPORT JOIN FOR CABLE TRAY LADDER

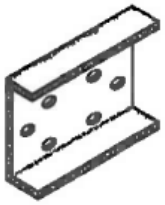

JOINTING FLANGE

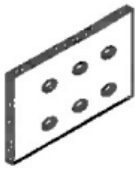

SPLICE PLATE

ID. No. : GLT - 20

NO.	GENERAL REQUIREMENTS	
1	COMPLIANCE STANDARD	ASTM A123/123M, NEMA VE-1
2	EQUIPMENT NAME	JOINTING FLANGE / SPLICE PLATE
3	TYPE	LADDER TYPE (HEAVY DUTY TYPE)
4	MATERIAL	SHEET STELL
5	FINISHED	HOT DIP GALVANIZED (MIN. 65 MICRON)
6	LENGTH	-
7	THICKNESS	MANUFACTURE STANDARD
8	REMARKS	DIMENSION OF JOINTING FLANGE : MANUFACTURE STANDARD
9	SERVICE	SUPPORT JOIN FOR CABLE TRAY LADDER

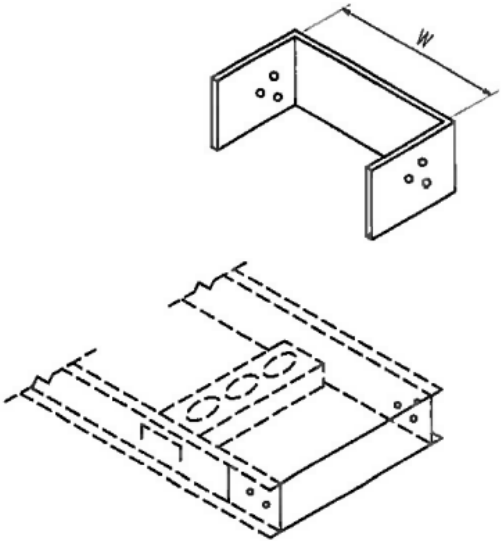

CABLE TRAY SIZE
154 (W)
304 (W)
454 (W)
604 (W)

ID. No. : GLT - 21

NO.	GENERAL REQUIREMENTS	
1	COMPLIANCE STANDARD	ASTM A123/123M, NEMA VE-1
2	EQUIPMENT NAME	END PLATE
3	TYPE	LADDER TYPE (HEAVY DUTY TYPE)
4	MATERIAL	SHEET STELL
5	FINISHED	HOT DIP GALVANIZED (MIN. 65 MICRON)
6	LENGTH	-
7	THICKNESS	MANUFACTURE STANDARD
8	REMARKS	OTHER DIMENSION OF END PLATE : MANUFACTURE STANDARD
9	SERVICE	COVER END CABLE TRAY LADDER

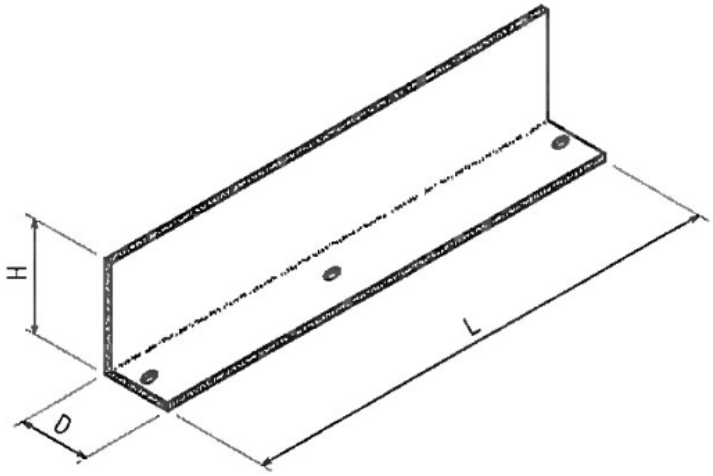

ID. No. : GLT - 22

NO.	GENERAL REQUIREMENTS	
1	COMPLIANCE STANDARD	ASTM A123/123M, NEMA VE-1
2	EQUIPMENT NAME	SEPARATOR STRAIGHT
3	TYPE	LADDER TYPE (HEAVY DUTY TYPE)
4	MATERIAL	SHEET STELL
5	FINISHED	HOT DIP GALVANIZED (MIN. 65 MICRON)
6	LENGTH	3000mm
7	THICKNESS	1.7mm
8	REMARKS	OTHER DIMENSION OF SEPARATOR : MANUFACTURE STANDARD
9	SERVICE	SEPARATE BETWEEN DEFERENT VOLTAGE CABLE

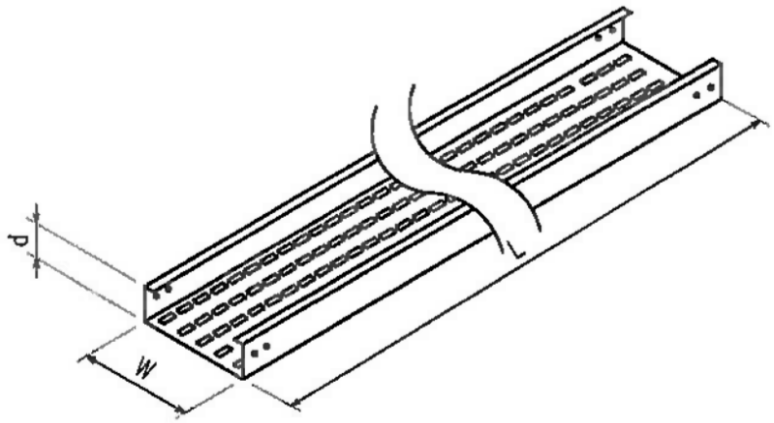

DIMENSION :

W (mm)	d (mm)	L (mm)
50	Min.50	3000
100	Min.50	3000
150	Min.50	3000
300	Min.50	3000

ID. No. : GVT - 01

NO.	GENERAL REQUIREMENTS	
1	COMPLIANCE STANDARD	ASTM A123/123M, NEMA VE-1
2	EQUIPMENT NAME	STRAIGHT CABLE TRAY
3	TYPE	PERFORATED TYPE (HEAVY DUTY TYPE)
4	MATERIAL	SHEET STELL
5	FINISHED	HOT DIP GALVANIZED (MIN. 65 MICRON)
6	LENGTH	3000mm
7	THICKNESS	2mm
8	REMARKS	-
9	SERVICE	SUPPORT CABLE RUN

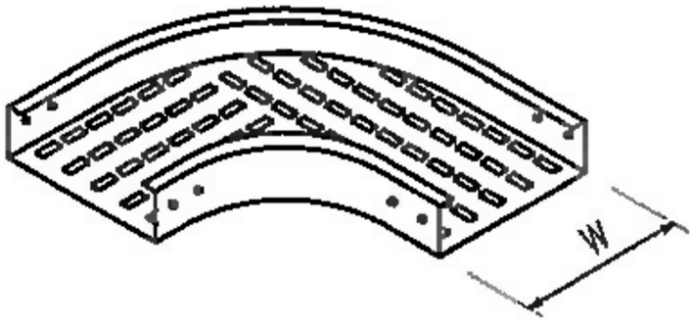

DIMENSION :

W (mm)	d (mm)	R (mm)
50	Min.50	150
50	Min.50	300
100	Min.50	150
100	Min.50	300
150	Min.50	150
150	Min.50	300
300	Min.50	150
300	Min.50	300

ID. No. : GVT - 02

NO.	GENERAL REQUIREMENTS	
1	COMPLIANCE STANDARD	ASTM A123/123M, NEMA VE-1
2	EQUIPMENT NAME	ELBOW 90° BEND
3	TYPE	PERFORATED TYPE (HEAVY DUTY TYPE)
4	MATERIAL	SHEET STELL
5	FINISHED	HOT DIP GALVANIZED (MIN. 65 MICRON)
6	LENGTH	-
7	THICKNESS	2mm
8	REMARKS	-
9	SERVICE	SUPPORT CABLE RUN

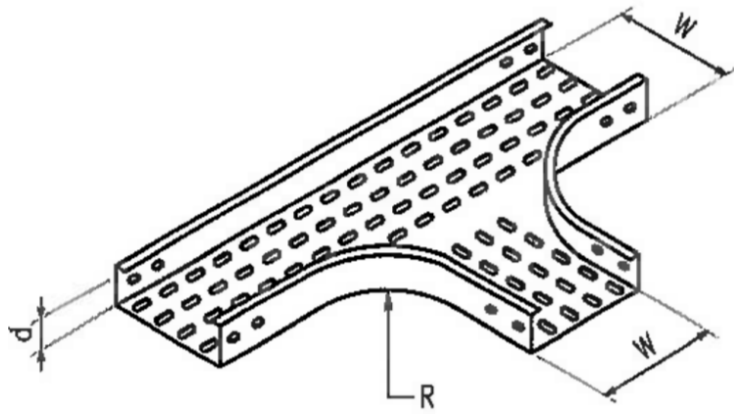

DIMENSION :

W (mm)	d (mm)	R (mm)
50	Min.50	150
50	Min.50	300
100	Min.50	150
100	Min.50	300
150	Min.50	150
150	Min.50	300
300	Min.50	150
300	Min.50	300

ID. No. : GVT - 03

NO.	GENERAL REQUIREMENTS	
1	COMPLIANCE STANDARD	ASTM A123/123M, NEMA VE-1
2	EQUIPMENT NAME	"TEE" BRANCH (EQUAL)
3	TYPE	PERFORATED TYPE (HEAVY DUTY TYPE)
4	MATERIAL	SHEET STELL
5	FINISHED	HOT DIP GALVANIZED (MIN. 65 MICRON)
6	LENGTH	-
7	THICKNESS	2mm
8	REMARKS	LENGTH OF "T" BRANCH : MANUFACTURE STANDARD
9	SERVICE	SUPPORT CABLE RUN

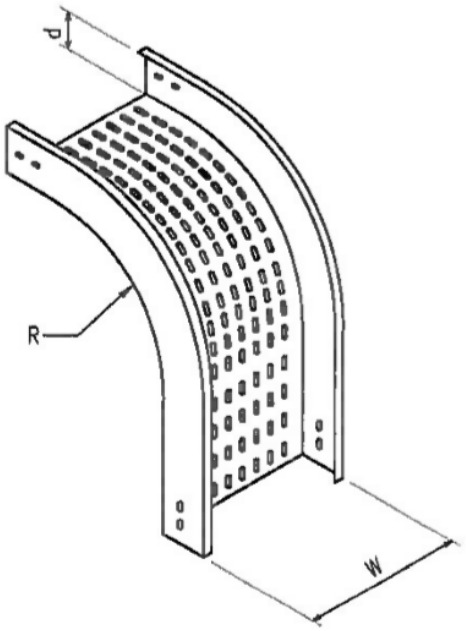

DIMENSION :

W (mm)	d (mm)	R (mm)
50	Min.50	150
50	Min.50	300
100	Min.50	150
100	Min.50	300
150	Min.50	150
150	Min.50	300
300	Min.50	150
300	Min.50	300

ID. No. : GVT - 04

NO.	GENERAL REQUIREMENTS	
1	COMPLIANCE STANDARD	ASTM A123/123M, NEMA VE-1
2	EQUIPMENT NAME	OUTSIDE RISER
3	TYPE	PERFORATED TYPE (HEAVY DUTY TYPE)
4	MATERIAL	SHEET STELL
5	FINISHED	HOT DIP GALVANIZED (MIN. 65 MICRON)
6	LENGTH	-
7	THICKNESS	2mm
8	REMARKS	-
9	SERVICE	SUPPORT CABLE RUN

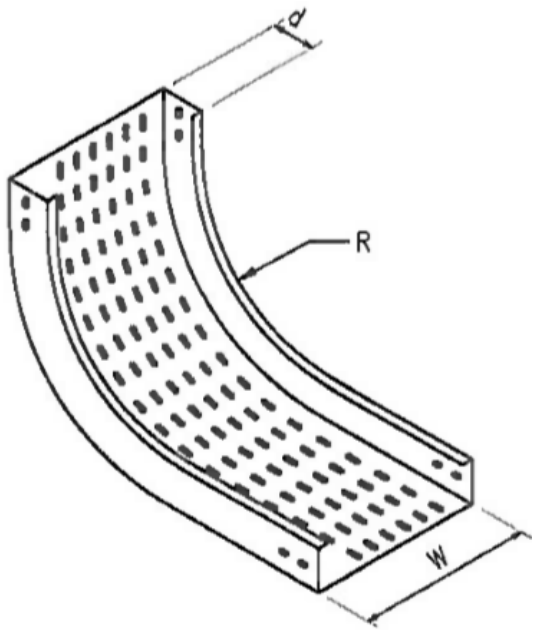

DIMENSION :

W (mm)	d (mm)	R (mm)
50	Min.50	150
50	Min.50	300
100	Min.50	150
100	Min.50	300
150	Min.50	150
150	Min.50	300
300	Min.50	150
300	Min.50	300

ID. No. : GVT - 05

NO.	GENERAL REQUIREMENTS	
1	COMPLIANCE STANDARD	ASTM A123/123M, NEMA VE-1
2	EQUIPMENT NAME	INSIDE RISER
3	TYPE	PERFORATED TYPE (HEAVY DUTY TYPE)
4	MATERIAL	SHEET STELL
5	FINISHED	HOT DIP GALVANIZED (MIN. 65 MICRON)
6	LENGTH	-
7	THICKNESS	2mm
8	REMARKS	-
9	SERVICE	SUPPORT CABLE RUN

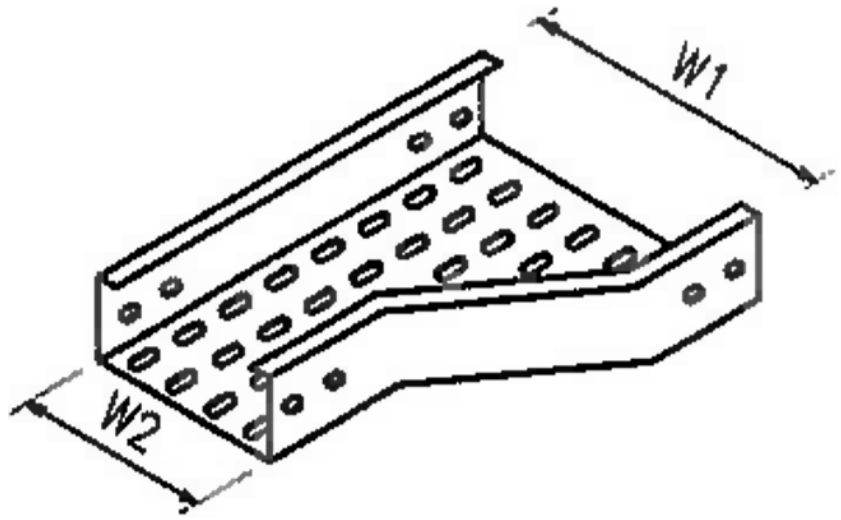

DIMENSION :

W1 (mm)	W2 (mm)
100	50
150	100
300	150
500	300

ID. No. : GVT - 06

NO.	GENERAL REQUIREMENTS	
1	COMPLIANCE STANDARD	ASTM A123/123M, NEMA VE-1
2	EQUIPMENT NAME	OFFSET REDUCER, LEFT HAND
3	TYPE	PERFORATED TYPE (HEAVY DUTY TYPE)
4	MATERIAL	SHEET STELL
5	FINISHED	HOT DIP GALVANIZED (MIN. 65 MICRON)
6	LENGTH	-
7	THICKNESS	2mm
8	REMARKS	DIMENSION OF "T" BRANCH (EQUAL) COVER : MANUFACTURE STANDARD
9	SERVICE	SUPPORT CABLE RUN

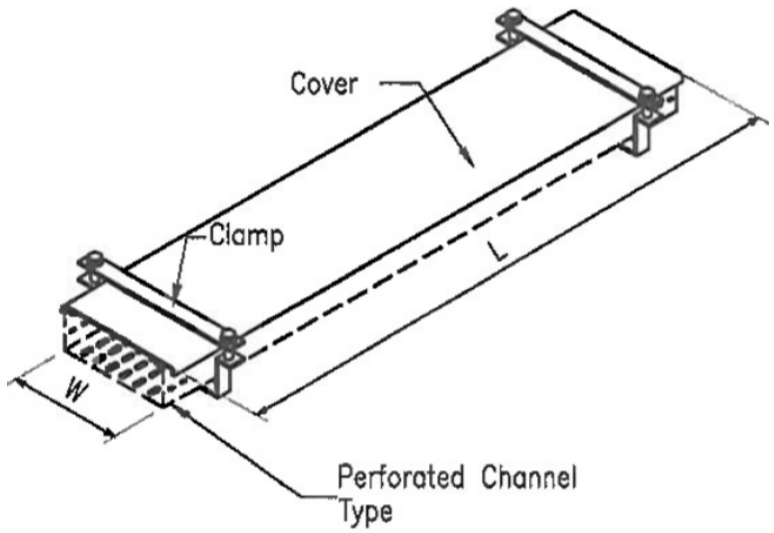

DIMENSION :

PERF. CHANNEL SIZE W (mm)	W2 (mm)
50	1500
100	1500
150	1500
300	1500

ID. No. : GVT - 07

NO.	GENERAL REQUIREMENTS	
1	COMPLIANCE STANDARD	ASTM A123/123M, NEMA VE-1
2	EQUIPMENT NAME	STRAIGHT CABLE TRAY COVER
3	TYPE	PERFORATED TYPE (HEAVY DUTY TYPE)
4	MATERIAL	SHEET STELL
5	FINISHED	HOT DIP GALVANIZED (MIN. 65 MICRON)
6	LENGTH	-
7	THICKNESS	2mm
8	REMARKS	DIMENSION OF STRAIGHT CABLE TRAY COVER : MANUFACTURE STANDARD
9	SERVICE	STRAIGHT COVER PERFORATED TRAY

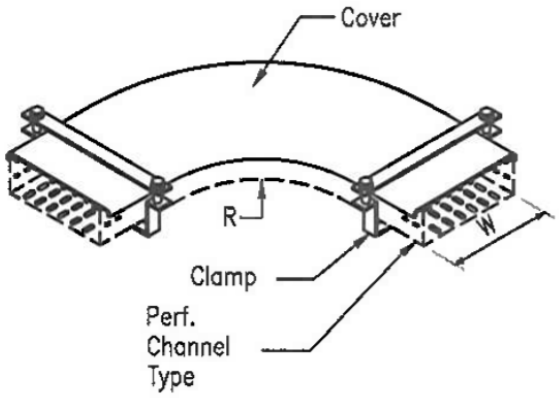

DIMENSION :

PERF. CHANNEL SIZE W (mm)	W2 (mm)
50	150
50	300
100	150
100	300
150	150
300	300

ID. No. : GVT - 08

NO.	GENERAL REQUIREMENTS	
1	COMPLIANCE STANDARD	ASTM A123/123M, NEMA VE-1
2	EQUIPMENT NAME	HORIZONTAL ELBOW COVER BEND 90°
3	TYPE	PERFORATED TYPE (HEAVY DUTY TYPE)
4	MATERIAL	SHEET STELL
5	FINISHED	HOT DIP GALVANIZED (MIN. 65 MICRON)
6	LENGTH	-
7	THICKNESS	2mm
8	REMARKS	DIMENSION OF HORIZONTAL ELBOW COVER : MANUFACTURE STANDARD
9	SERVICE	HORIZONTAL ELBOW COVER CABLE TRAY BEND 90°

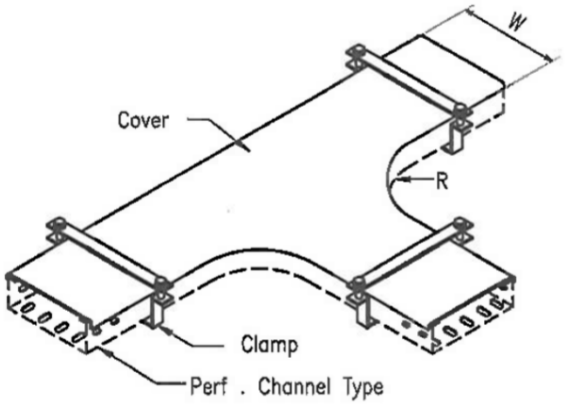

DIMENSION :

W (mm)	R (mm)
50	150
50	300
100	150
100	300
150	150
150	300
300	150
300	300

ID. No. : GVT - 09

NO.	GENERAL REQUIREMENTS	
1	COMPLIANCE STANDARD	ASTM A123/123M, NEMA VE-1
2	EQUIPMENT NAME	"TEE" BRANCH (EQUAL) COVER
3	TYPE	PERFORATED TYPE (HEAVY DUTY TYPE)
4	MATERIAL	SHEET STELL
5	FINISHED	HOT DIP GALVANIZED (MIN. 65 MICRON)
6	LENGTH	-
7	THICKNESS	2mm
8	REMARKS	DIMENSION OF "TEE" BRANCH COVER : MANUFACTURE STANDARD
9	SERVICE	"TEE" BRANCH (EQUAL) COVER CABLE TRAY

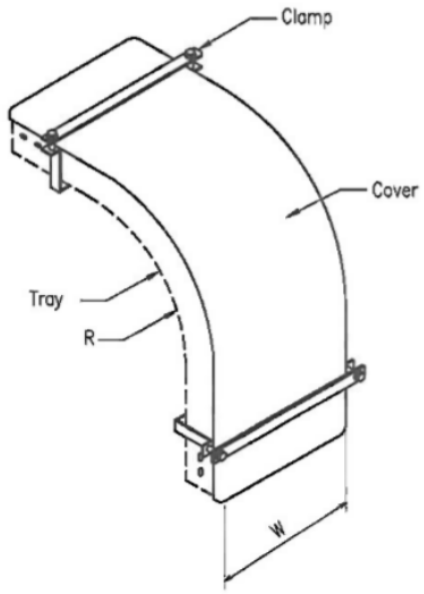

DIMENSION :

W (mm)	R (mm)
50	150
50	300
100	150
100	300
150	150
150	300
300	150
300	300

ID. No. : GVT - 10

NO.	GENERAL REQUIREMENTS	
1	COMPLIANCE STANDARD	ASTM A123/123M, NEMA VE-1
2	EQUIPMENT NAME	OUTSIDE RISER COVER BEND 90°
3	TYPE	PERFORATED TYPE (HEAVY DUTY TYPE)
4	MATERIAL	SHEET STELL
5	FINISHED	HOT DIP GALVANIZED (MIN. 65 MICRON)
6	LENGTH	-
7	THICKNESS	2mm
8	REMARKS	DIMENSION OF OUTSIDE RISER COVER : MANUFACTURE STANDARD
9	SERVICE	OUTSIDE RISER COVER CABLE TRAY BEND 90°

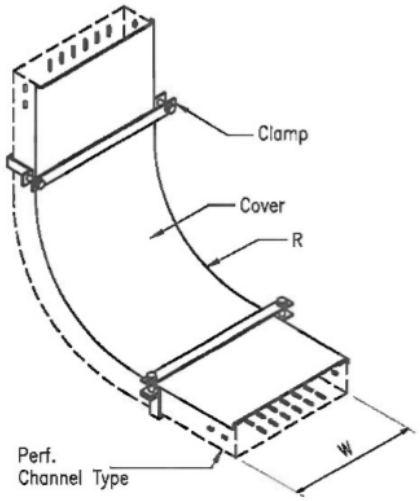

DIMENSION :

W (mm)	R (mm)
50	150
50	300
100	150
100	300
150	150
150	300
300	150
300	300

ID. No. : GVT - 11

NO.	GENERAL REQUIREMENTS	
1	COMPLIANCE STANDARD	ASTM A123/123M, NEMA VE-1
2	EQUIPMENT NAME	INSIDE RISER COVER BEND 90°
3	TYPE	PERFORATED TYPE (HEAVY DUTY TYPE)
4	MATERIAL	SHEET STELL
5	FINISHED	HOT DIP GALVANIZED (MIN. 65 MICRON)
6	LENGTH	-
7	THICKNESS	2mm
8	REMARKS	DIMENSION OF INSIDE RISER COVER : MANUFACTURE STANDARD
9	SERVICE	INSIDE RISER COVER CABLE TRAY BEND 90

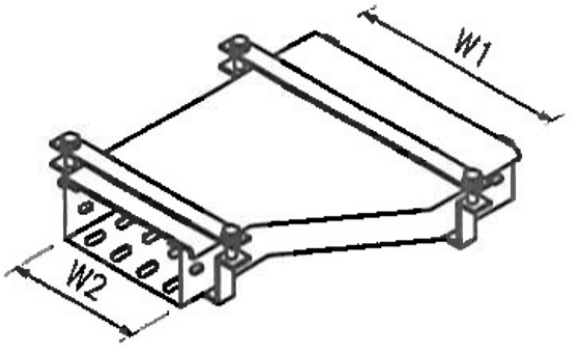

DIMENSION :

W1 (mm)	W2 (mm)
100	50
150	100
300	150
600	300

ID. No. : GVT - 12

NO.	GENERAL REQUIREMENTS	
1	COMPLIANCE STANDARD	ASTM A123/123M, NEMA VE-1
2	EQUIPMENT NAME	COVER OFFSET REDUCER, LEFT HAND
3	TYPE	PERFORATED TYPE (HEAVY DUTY TYPE)
4	MATERIAL	SHEET STELL
5	FINISHED	HOT DIP GALVANIZED (MIN. 65 MICRON)
6	LENGTH	-
7	THICKNESS	2mm
8	REMARKS	DIMENSION OF "T" BRANCH (EQUAL) COVER : MANUFACTURE STANDARD
9	SERVICE	COVER OFFSET REDUCER, LEFT HAND CABLE TRAY

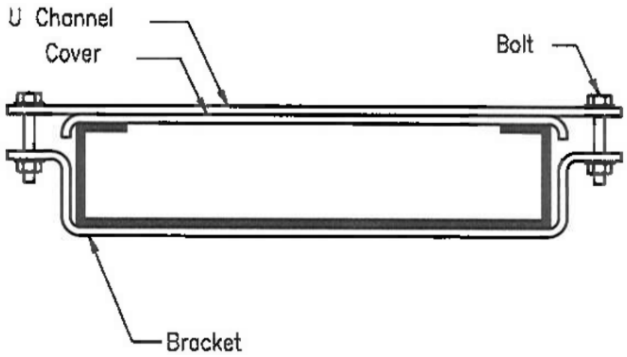

COMPRISES :

- Channel : 1 pc
- Bracket : 2 pcs
- Bolts, Nuts and Washers : 2 pcs

DIMENSION :

PERF. CHANNEL SIZE	HEIGHT
50	50
100	50
150	50
300	50

ID. No. : GVT - 13

NO.	GENERAL REQUIREMENTS	
1	COMPLIANCE STANDARD	ASTM A123/123M, NEMA VE-1
2	EQUIPMENT NAME	COVER CLAMP
3	TYPE	PERFORATED TYPE (HEAVY DUTY TYPE)
4	MATERIAL	SHEET STELL
5	FINISHED	HOT DIP GALVANIZED (MIN. 65 MICRON)
6	LENGTH	-
7	THICKNESS	2mm
8	REMARKS	DIMENSION OF "T" BRANCH (EQUAL) COVER : MANUFACTURE STANDARD
9	SERVICE	COVER OFFSET REDUCER, LEFT HAND CABLE TRAY

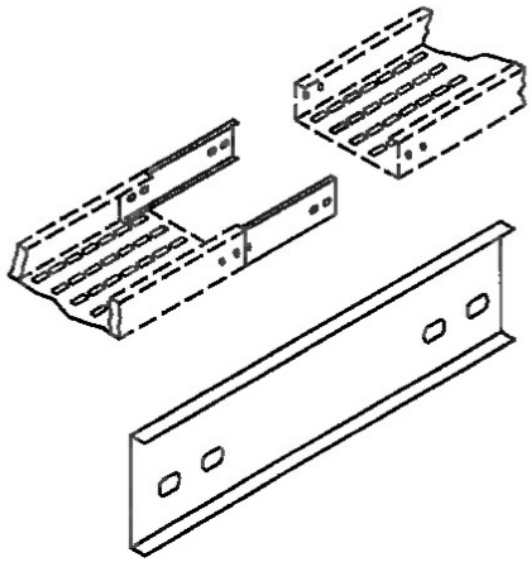

ID. No. : GVT - 14

NO.	GENERAL REQUIREMENTS	
1	COMPLIANCE STANDARD	ASTM A123/123M, NEMA VE-1
2	EQUIPMENT NAME	COUPLING PLATE
3	TYPE	PERFORATED TYPE (HEAVY DUTY TYPE)
4	MATERIAL	SHEET STELL
5	FINISHED	HOT DIP GALVANIZED (MIN. 65 MICRON)
6	LENGTH	-
7	THICKNESS	2mm
8	REMARKS	LENGTH OF COUPLING PLATE : MANUFACTURE STANDARD
9	SERVICE	JOINTING PERFORATED TRAY

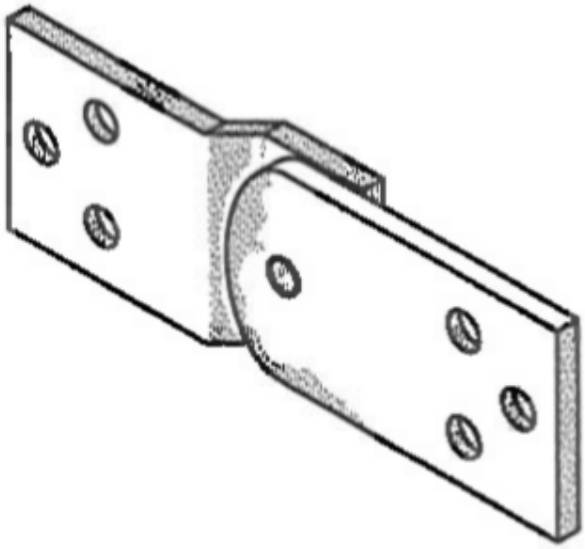

ID. No. : GVT - 15

NO.	GENERAL REQUIREMENTS	
1	COMPLIANCE STANDARD	ASTM A123/123M, NEMA VE-1
2	EQUIPMENT NAME	VERTICAL HINGE ADJUSTABLE
3	TYPE	PERFORATED TYPE (HEAVY DUTY TYPE)
4	MATERIAL	SHEET STELL
5	FINISHED	HOT DIP GALVANIZED (MIN. 65 MICRON)
6	LENGTH	-
7	THICKNESS	MANUFACTURE STANDARD
8	REMARKS	DIMENSION OF VERTICAL HINGE : MANUFACTURE STANDARD
9	SERVICE	JOINTING PERFORATED TRAY

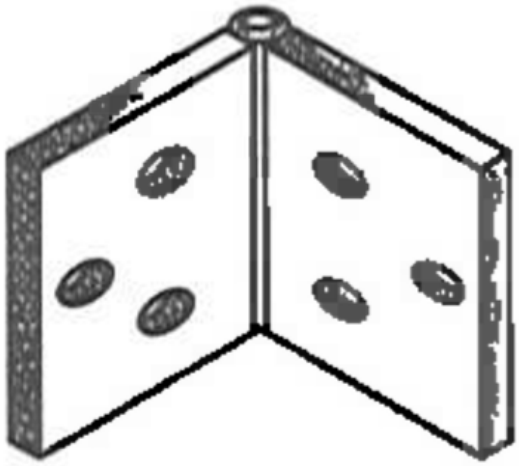

ID. No. : GVT - 16

NO.	GENERAL REQUIREMENTS	
1	COMPLIANCE STANDARD	ASTM A123/123M, NEMA VE-1
2	EQUIPMENT NAME	HORIZONTAL HINGE ADJUSTABLE
3	TYPE	PERFORATED TYPE (HEAVY DUTY TYPE)
4	MATERIAL	SHEET STELL
5	FINISHED	HOT DIP GALVANIZED (MIN. 65 MICRON)
6	LENGTH	-
7	THICKNESS	MANUFACTURE STANDARD
8	REMARKS	DIMENSION OF HORIZONTAL HINGE : MANUFACTURE STANDARD
9	SERVICE	JOINTING PERFORATED TRAY

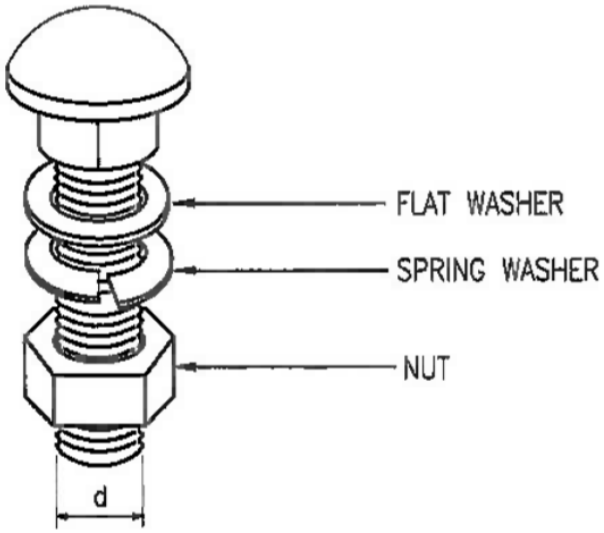

DIMENSION :

d	L (mm)
M10	25 OR MFR STD

ID. No. : AT - 01

NO.	GENERAL REQUIREMENTS	
1	COMPLIANCE STANDARD	ASTM A123/123M, NEMA VE-1
2	EQUIPMENT NAME	ROUND HEAD SQUARE NECK
3	TYPE	-
4	MATERIAL	HOT DIP GALVANIZED
5	FINISHED	NATURAL
6	LENGTH	-
7	THICKNESS	-
8	REMARKS	LENGTH OF SPLINED BOLT : MANUFACTURE STANDARD
9	SERVICE	FASTEN JOINTING CABLE TRAY